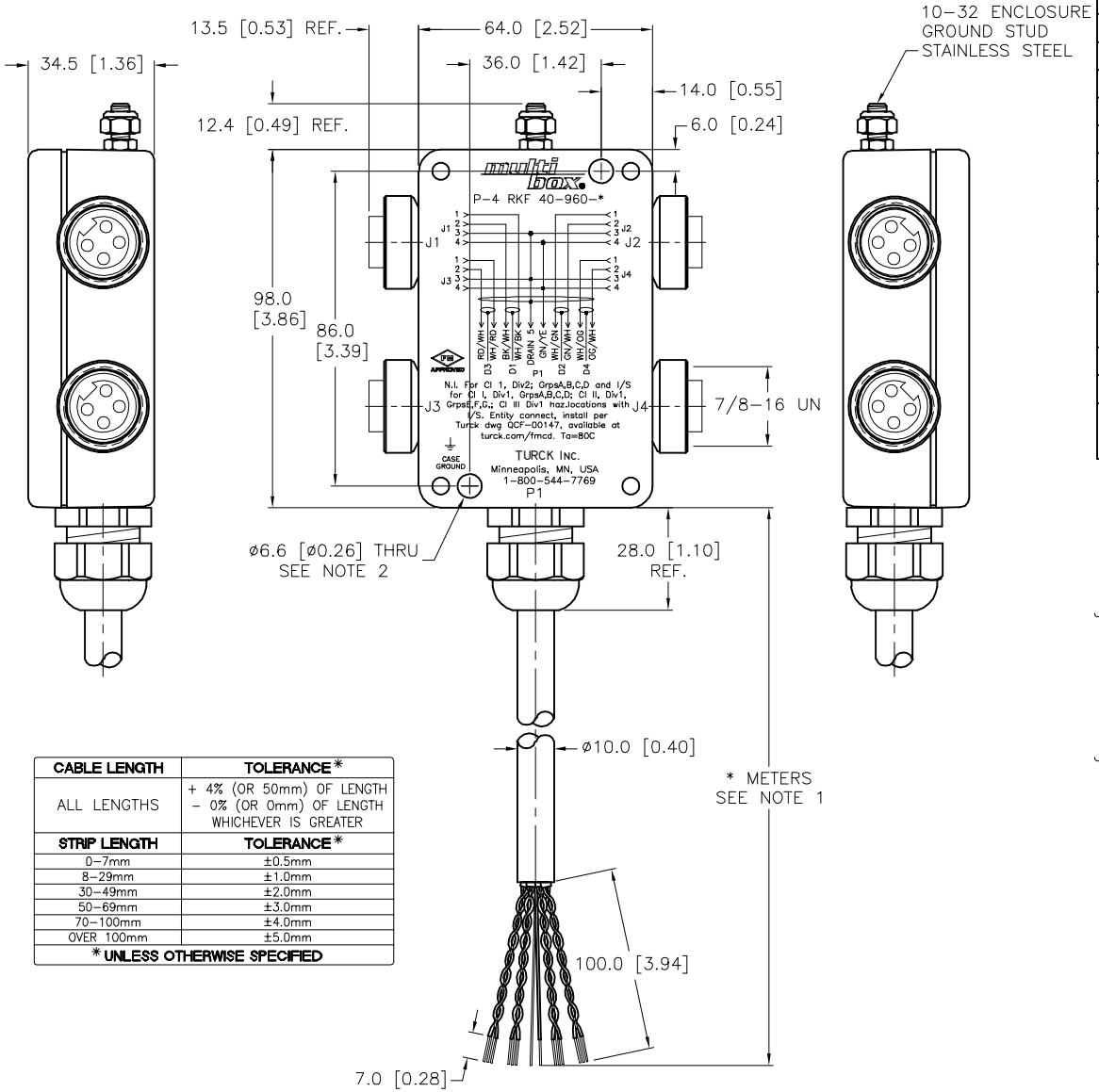

CABLE LENGTH	TOLERANCE *
ALL LENGTHS	+ 4% (OR 50mm) OF LENGTH − 0% (OR 0mm) OF LENGTH WHICHEVER IS GREATER
STRIP LENGTH	**TOLERANCE ***
0−7mm	±0.5mm
8−29mm	±1.0mm
30−49mm	±2.0mm
50−69mm	±3.0mm
70−100mm	±4.0mm
OVER 100mm	±5.0mm
*** UNLESS OTHERWISE SPECIFIED**	

SPECIFICATIONS	
HOUSING MATERIAL	DIE−CAST ALUMINUM ALLOY
HOUSING FINISH/COLOR	POWDER COAT/BLACK
RECEPTACLE HOUSING MAT'L/PLATING	BRASS/NICKEL
GLAND MATERIAL	NYLON
CONTACT CARRIER MATERIAL/COLOR	NYLON/BLACK
CONTACT MATERIAL/PLATING	BRASS/GOLD
OPERATING VOLTAGE	250 VAC/300 VDC
OPERATING CURRENT	4.0 AMPS PER PORT, 8.0 AMPS TOTAL
OUTER JACKET MATERIAL/COLOR	PVC/PLUM
CONDUCTOR INSULATION MATERIAL	PVC
CONDUCTORS	8x22 AWG, 1x18 AWG GROUND
DRAIN/SHIELD	5x22 AWG DRAINS/ALUM.−POLYESTER FOIL
PROTECTION CLASS	MEETS NEMA 1,3,4,6P,12 AND IEC IP67, IP68,IP69,IP69K
OPERATING TEMPERATURE	−40°C to +80°C (−40°F to +176°F)
CONDUCTOR ARRANGEMENT	4 STP W/DRAIN, 1 GND, 1 DRN
CABLE RATINGS	UL: ITC/PLTC/AWM, 105°C, 300 V CSA: CMG/AWM, 105°C, 300 V

FEMALE END VIEW (J1−J4)

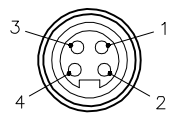

1 = BLUE (V−)
2 = BROWN (V+)
3 = DRAIN (SHD)
4 = GRN/YEL (GND)

mini fast.

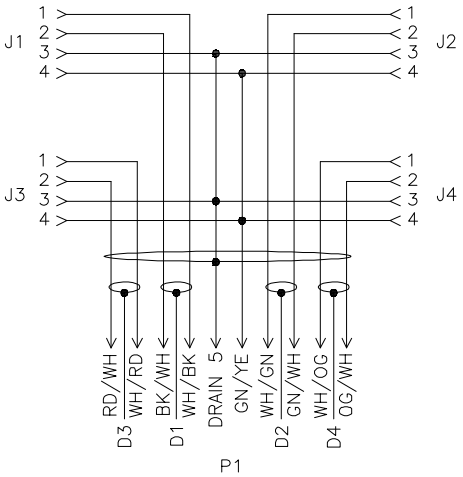

WIRING DIAGRAM

SOURCE DRAWING - FOR REFERENCE ONLY

NOTES:

1. "*" INDICATES CABLE LENGTH IN METERS. CONTACT TURCK TO ORDER SPECIFIC LENGTHS.

2. CLEARENCE HOLE FOR 1/4−20 MOUNTING SCREWS (2 NOT INCLUDED).

REV	DESCRIPTION	BY	DATE	ECO NO.
D	UPDATED PROTECTION CLASS	ER	04/22/21	76668

RELATED DOCUMENTS
1.
2.
3.
4.

3RD ANGLE PROJECTION

THIS DRAWING IS CONFIDENTIAL AND THE PROPERTY OF TURCK INC. USE OF THIS DOCUMENT WITHOUT WRITTEN PERMISSION IS PROHIBITED.

TURCK

3000 CAMPUS DRIVE
MINNEAPOLIS, MN 55441
1−800−544−7769
(763) 553−7300
(763) 553−0708 fax
www.turck.us

MATERIAL: SEE SPECIFICATIONS

FINISH: SEE SPECIFICATIONS

ALL DIMENSIONS DISPLAYED ON THIS DRAWING ARE FOR REFERENCE ONLY

CONTACT TURCK FOR MORE INFORMATION

DRFT: JBJ | DATE: 05/22/03
APVD | SCALE: 1=2.0

UNIT OF MEASUREMENT
MILLIMETER [INCH]
DO NOT SCALE THIS DRAWING

DESCRIPTION: P−4 RKF 40−960−*

IDENTIFICATION NO.

REV: D

FILE: 777001401 | SHEET 1 OF 1

Approved 04/26/2021, work order #230702 by A.A.